Anodes compatible with Volvo Penta

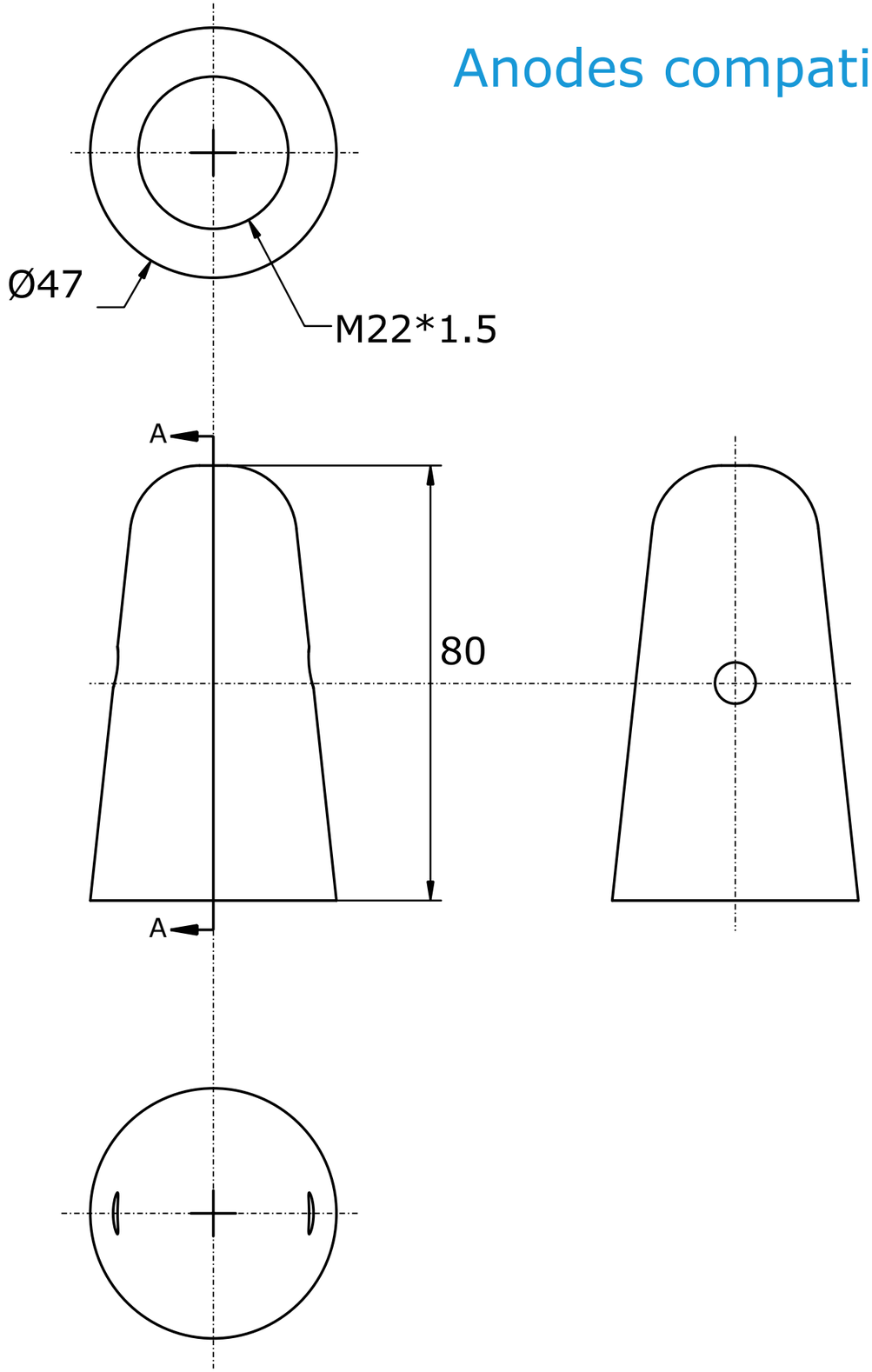

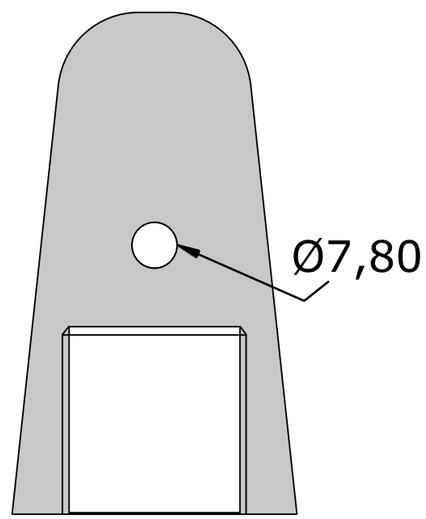

Sectional view A-A

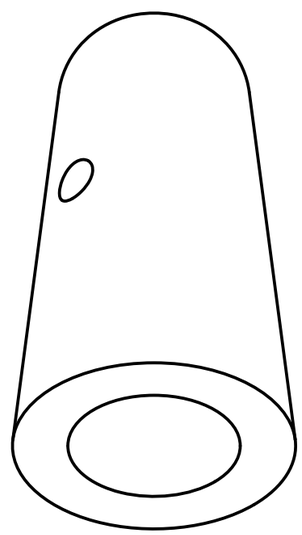

Tilted view

Anode Category : Anodes compatible with Volvo Penta	Article: 9233AL	Zst:	Changes:	Date:
Material: AlZn5In	Weight: 0,213kg			
ISO (Norm)	(For information only, is not subject to change management)	Scale: 1:1		