Ovalanode

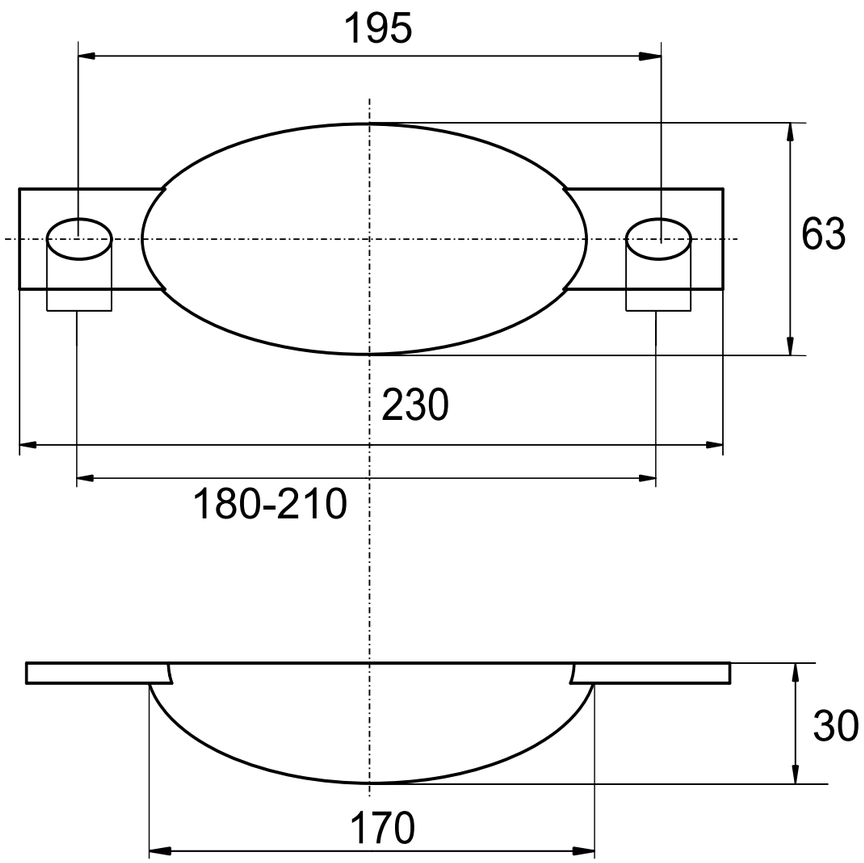

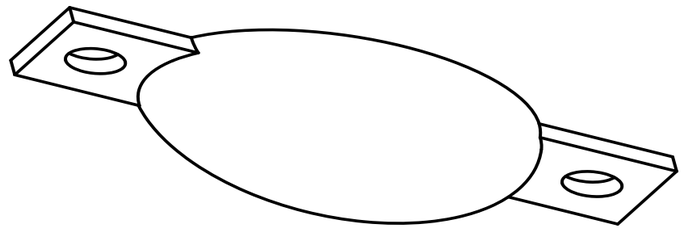

Tilted-view

OPFERANODE24.DE	Anode Category : Ovalanode	Article: 9305AL			
	Material: AlZn5In	Weight: 0,520kg			
ISO (Norm)	(For information only, is not subject to change management)	Scale: /	Zst:	Changes:	Date: